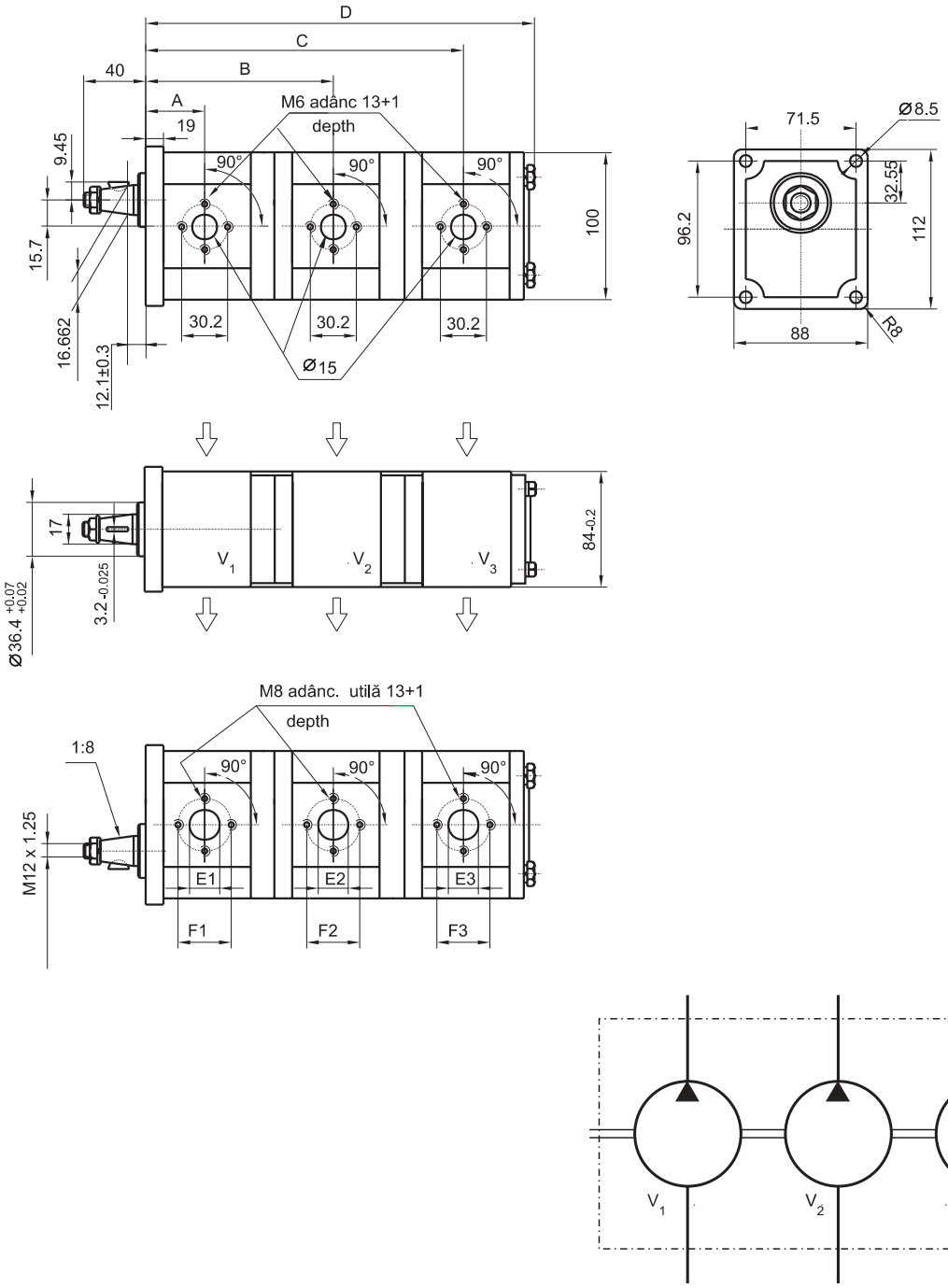

Type code		Displa-cement $V_1+V_2+V_3$ cm^3/rev	Dimensions							Weight Kg
			A	B	C	D	E_1/F_1	E_2/F_2	E_3/F_3	
PRD222-21111D	PRD222-21111S	4+4+4	41	122.5	181	229	15/30.2	15/30.2	15/30.2	8.4
PRD222-21431D	PRD222-21431S	11+8+4	48.5	137.6	222	269	20/39.7	15/30.2	15/30.2	8.7
PRD222-21444D	PRD222-21444S	11+11+11	48.5	138	231	284	20/39.7	20/39.7	20/39.7	9
PRD222-21643D	PRD222-21643S	16+11+8	49	146	221	287.4	20/39.7	20/39.7	15/30.2	9.3
PRD222-21731D	PRD222-21731S	19+8+4	49	151	235	282.3	20/39.7	15/30.2	15/30.2	9.3

PRD222

121000

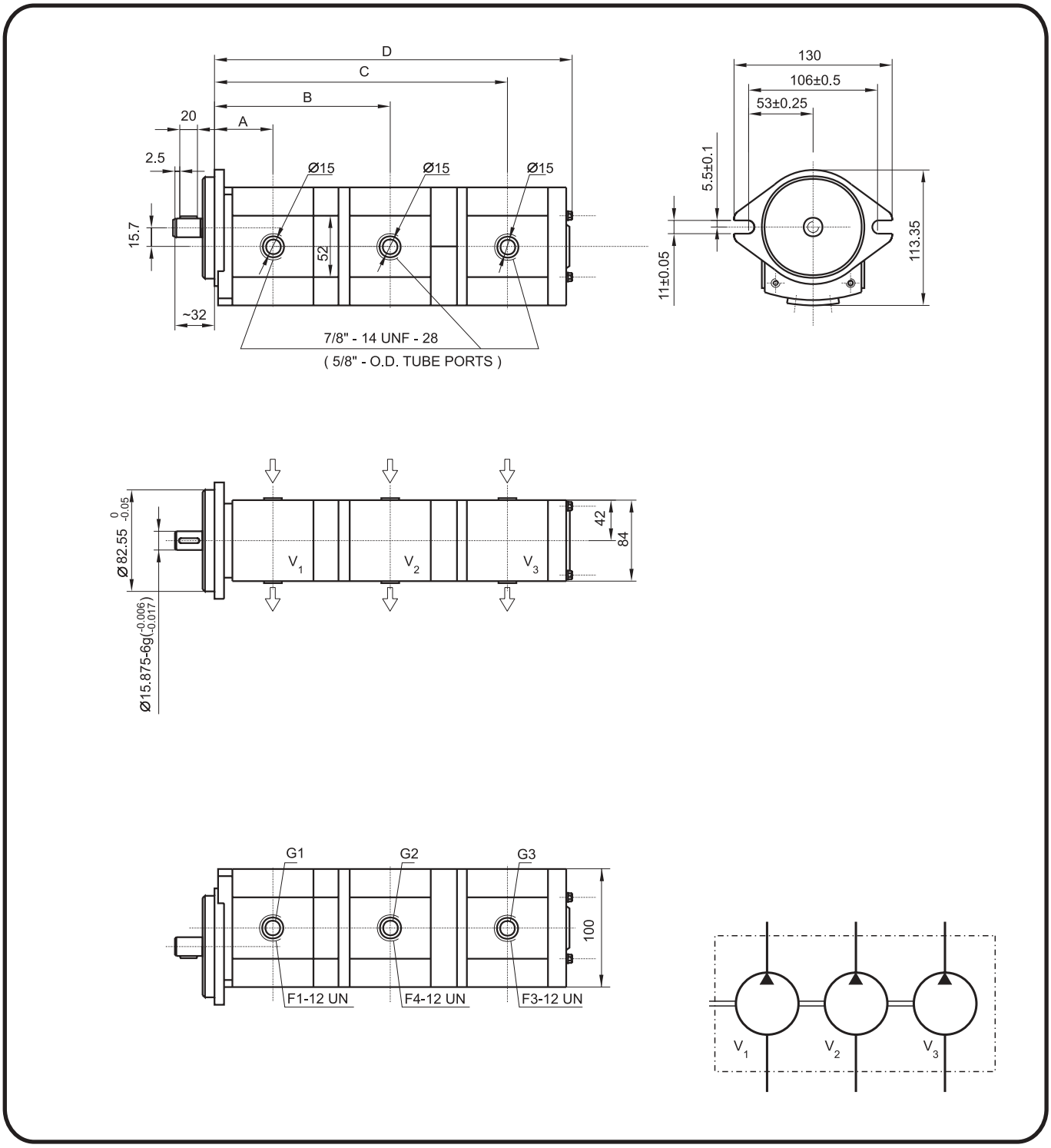

Type code		Displa-cement $V_1+V_2+V_3$ cm^3/rev	Dimensions											Weight Kg
			A	B	C	D	E	F1	F2	F3	G1	G2	G3	
PRD222-121555D	PRD222-121555S	14+14+14	49	147.4	245.7	5300		1 1/16"	1 1/16"	1 1/16"	20	20	20	9.6