PRD333

21000

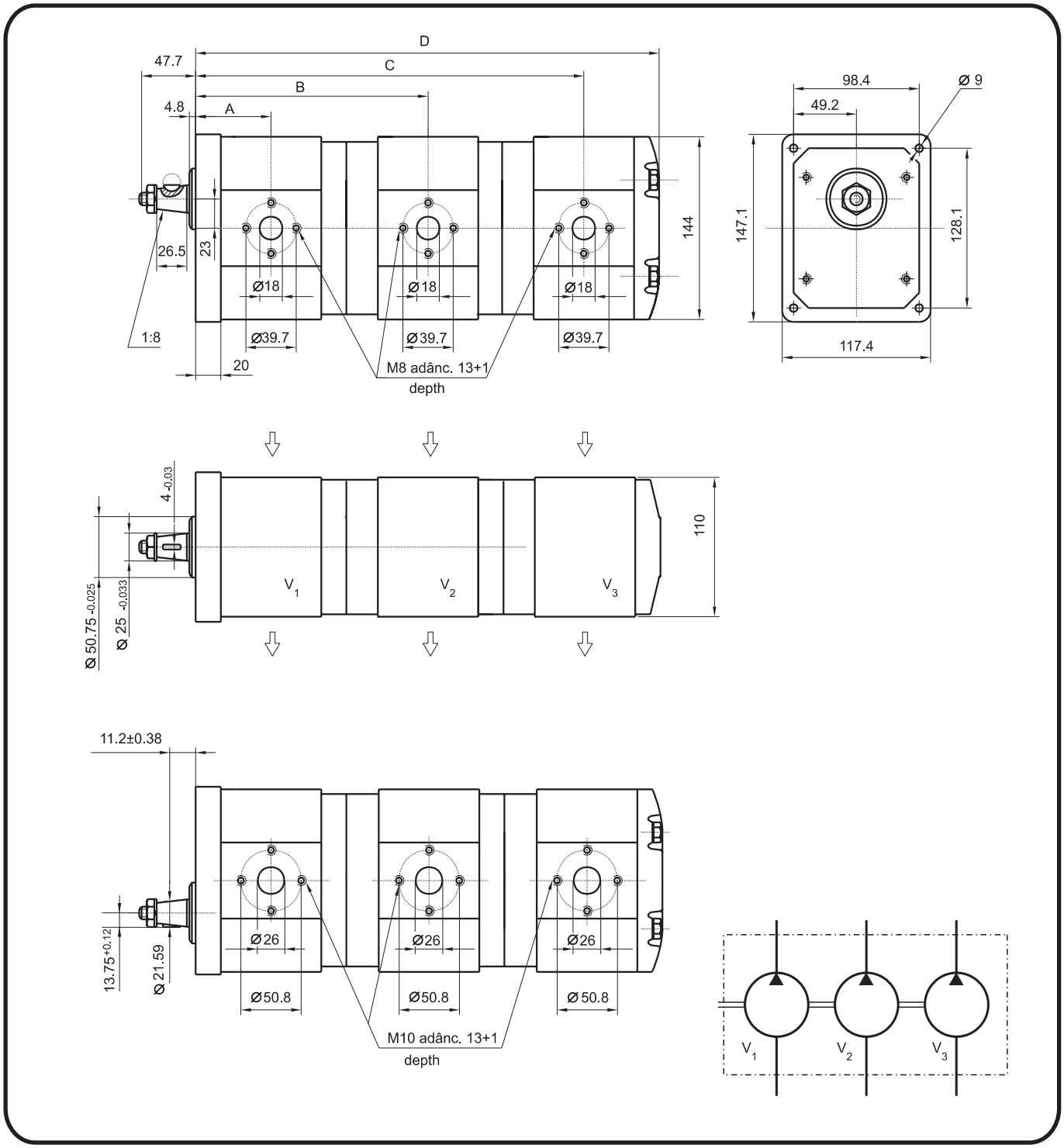

Type code		Displacement $V_1+V_2+V_3$ cm^3/rev	Dimensions				Weight Kg
			A	B	C	D	
PRD333-21111D	PRD333-21111S	22.5+22.5+22.5	61	193.7	326.4	394.1	27
PRD333-21311D	PRD333-21311S	32+22.5+22.5	64.5	202.2	335	402.6	27.3
PRD333-21552D	PRD333-21552S	45+45+28	69.5	222.7	369.4	440.1	28.5
PRD333-21553D	PRD333-21553S	45+45+32	69.5	222.7	371	443.6	28.7

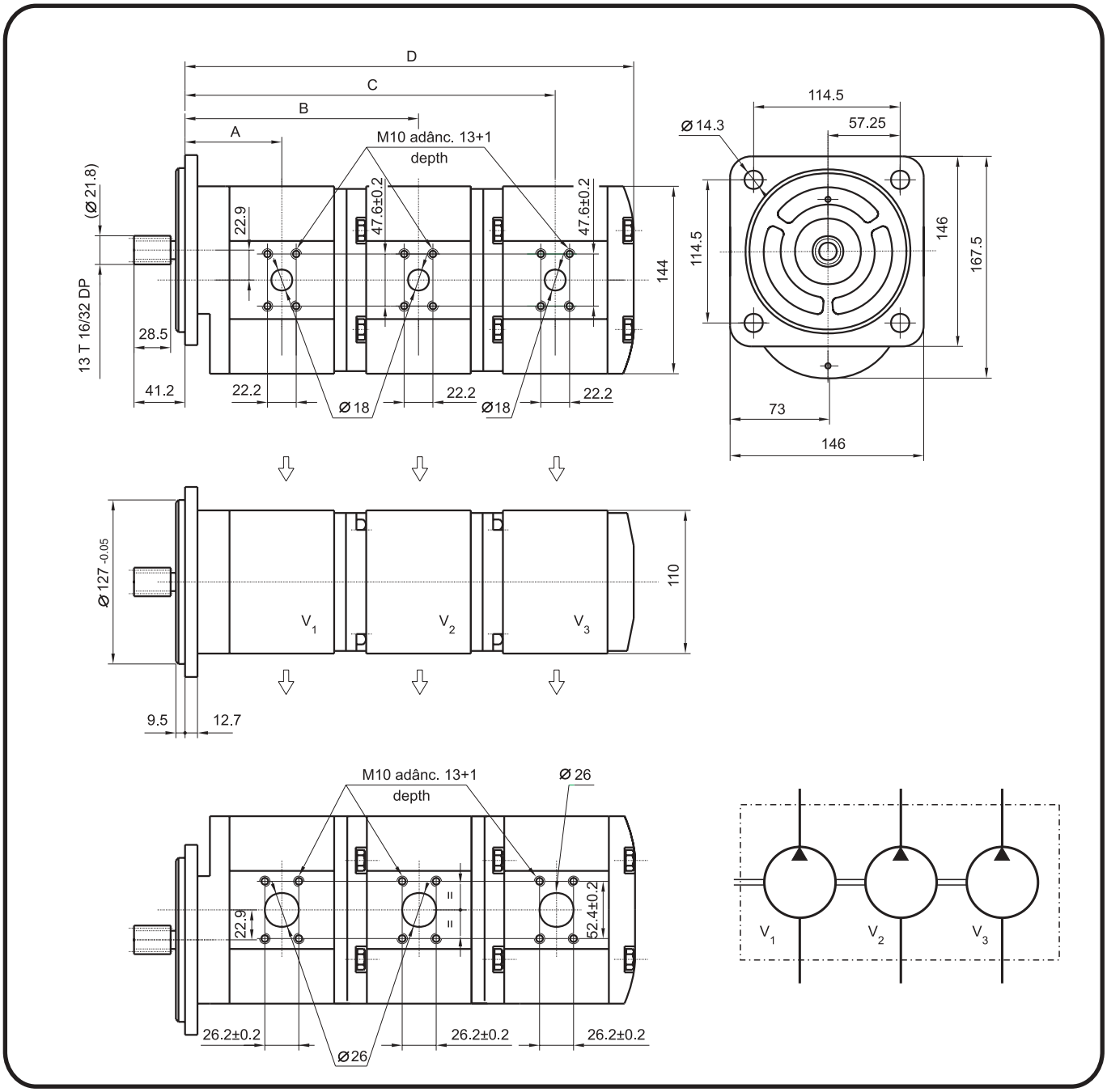

Type code		Displacement $V_1+V_2+V_3$ cm^3/rev	Dimensions					Weight Kg
			A	B	C	D		
PRD333-41511D	PRD332-41511S	45+22.5+22.5	101	245.7	378.4	446		28
PRD333-41521D	PRD332-41521S	45+28+22.5	101	247.7	383.4	451		28.2
PRD333-41552D	PRD332-41552S	45+45+28	101	254	401	472		29

PRD333

51000/I

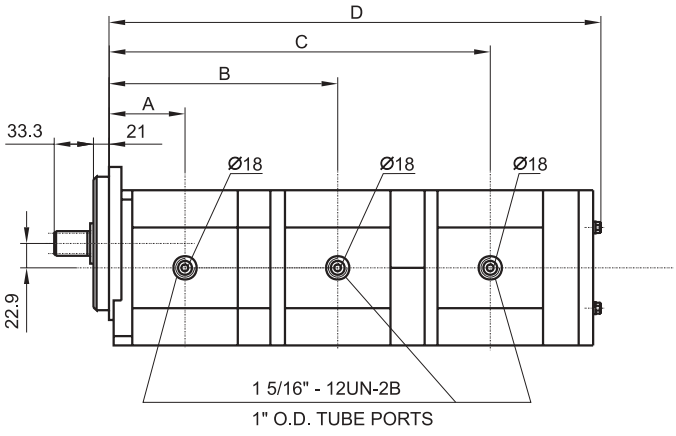

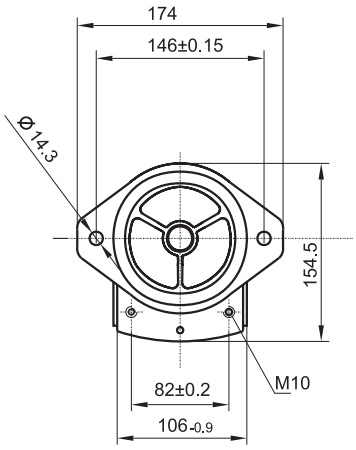

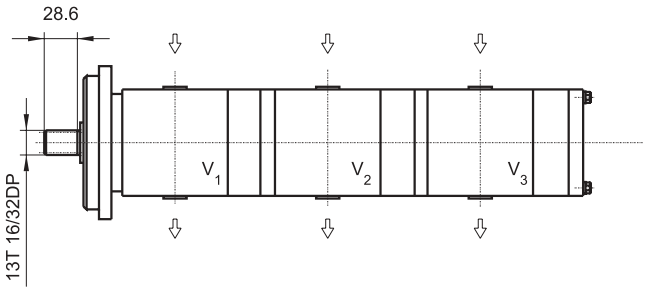

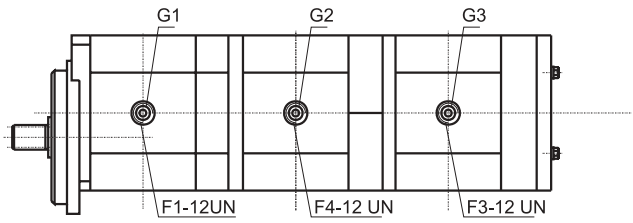

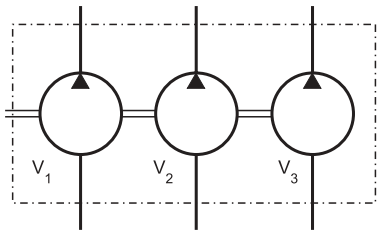

Type code		Displa-cement $V_1+V_2+V_3$ cm^3/rev	Dimensions											Weight Kg
			A	B	C	D	E	F1	F2	F3	G1	G2	G3	
PRD333-51773D/I	PRD333-51773S/I	63+63+32	81.6	252.4	407	491		1 7/8"	1 7/8"	1 5/8"	33	33	26	33.2